TYPICAL BRACHYTHERAPY (HDR Ir-192) INSTALLATION

(AREA: 4mX5m)

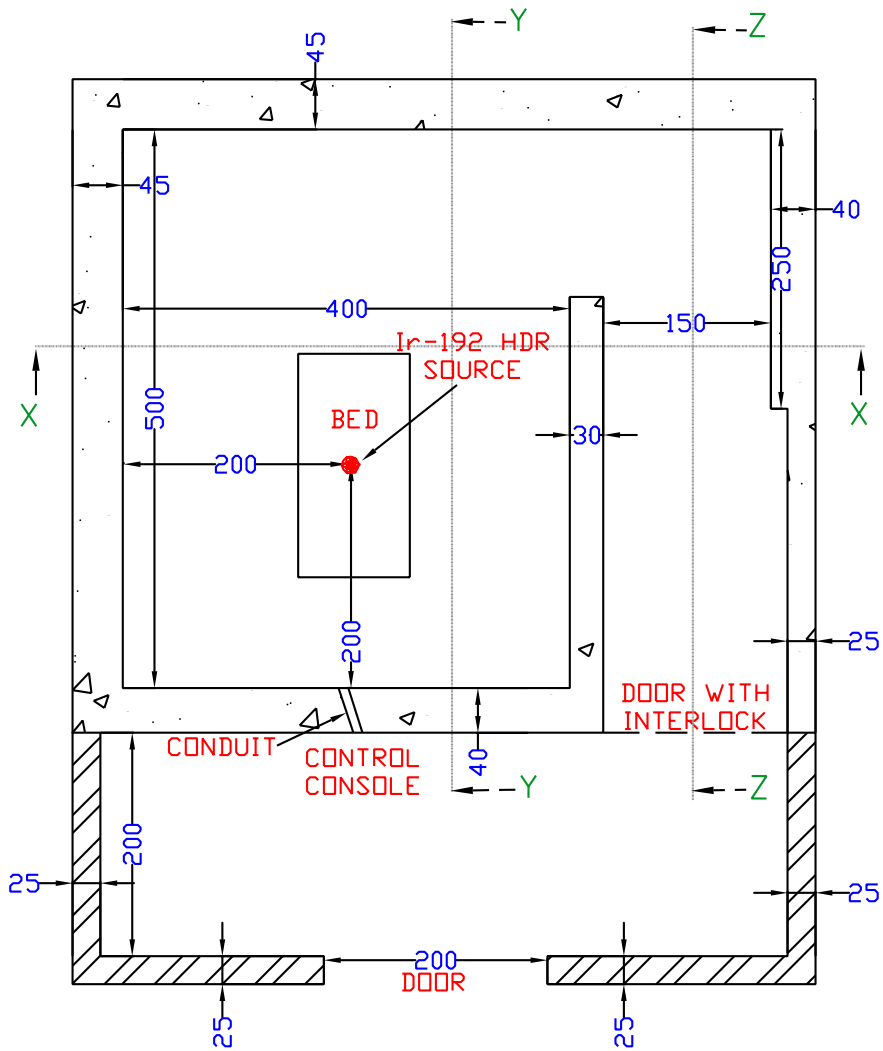

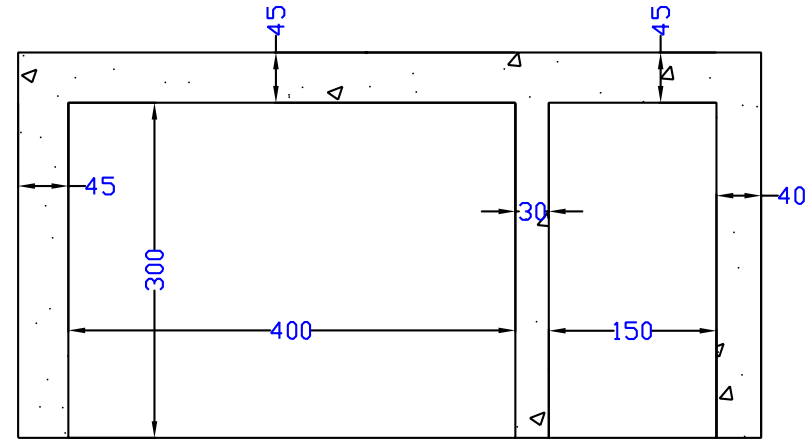

SECTION X-X

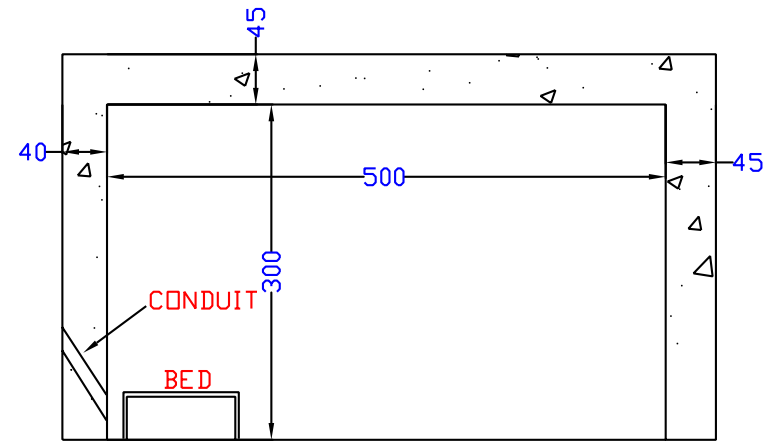

SECTION Y-Y

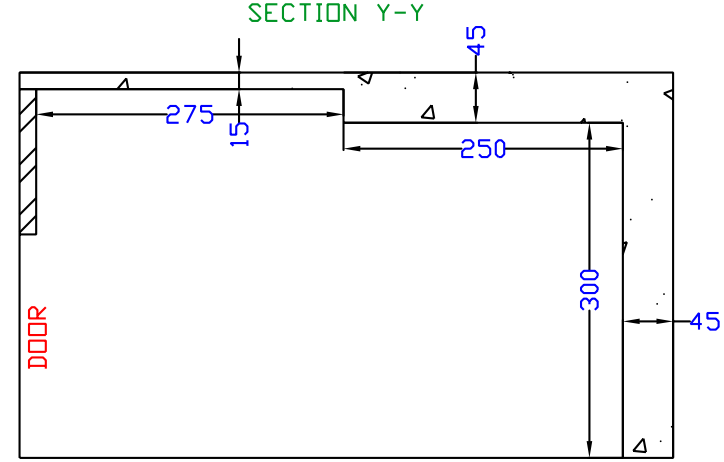

SECTION Z-Z

CONCRETE of density: 2.35 gm/cc

BRICK

NOT TO SCALE : All dimensions are in Centimeter